3-D Solid Modeling and Design

Student Learning Activities for

PTC Pro/DESKTOP® 8.0

Activity #11

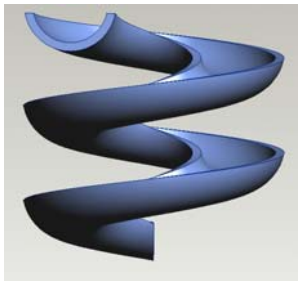

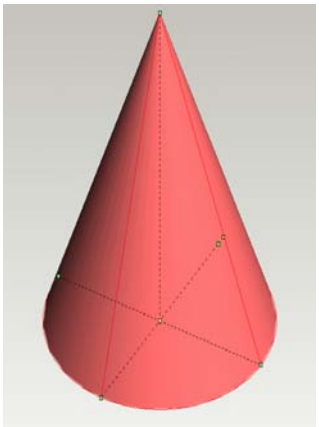

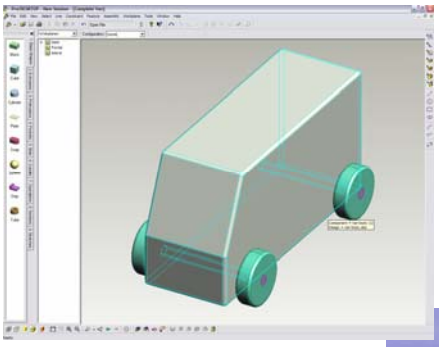

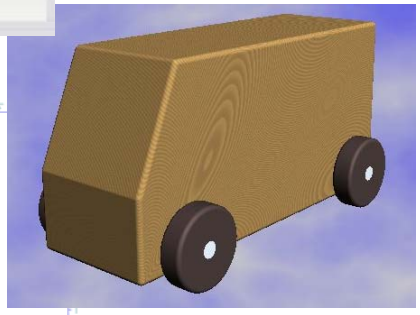

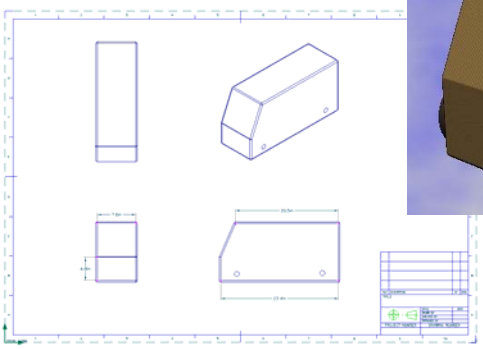

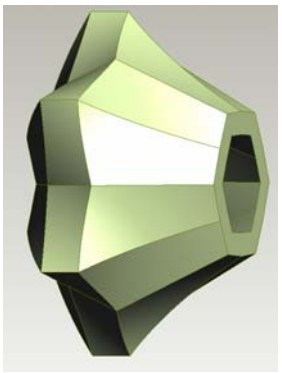

Activity 11:

<u>"Sweep me off my feet!"</u>

(Flesch-Kincaid readability level= 6.7)

About the program

Pro/Desktop (called 'PD' from now on) is a powerful software program that allows you to sketch ideas first, and then work on design details later.

This activity will help you:

- Create profiles and paths to Sweep around axes and helixes

Sweep along a Path

The **Sweep** feature ( ) in the Features Toolbar will let you 'sweep' or draw a profile along either a straight/curved path or along a **helix** (spiral path). The profile of all sketches to be 'swept' MUST begin perpendicular to the start of the path. Let's explore:

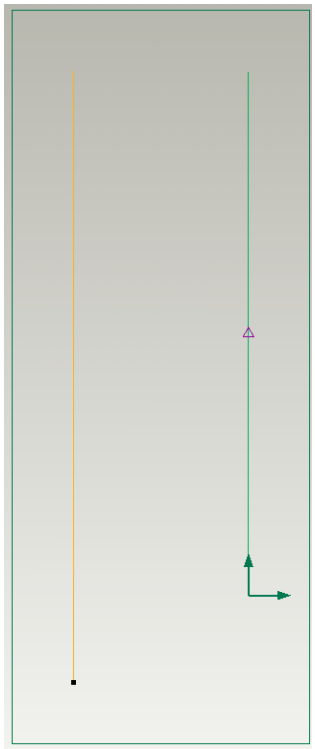

In the workplane view of the Base workplane, rename the 'initial' sketch as '**path**'. Draw a 28 mm vertical line straight up from the Point of Origin. You do not want this line to move, so you will fix it in place with the **Toggle Fixed** constraint in the Constraint pull-down menu. Notice a small, purple constraint marker appear on the line after you fix it in place.

Draw a vertical line to the left of the first one by starting at the Snap to Grid position, (-16, 28). Draw straight down to (-16, -13). This will be a 41 mm line which is 6 mm to the left and parallel with the first one.

Connect the top two lines with an **arc**.

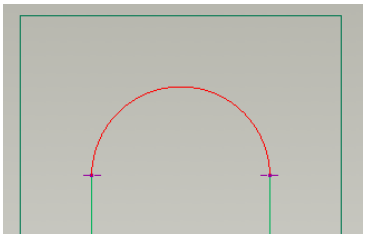

Now, draw another vertical line from the Snap to Grid position (-3.5, -13) to (-3.5, 13). Connect the bottom ends of the two lowest lines with an **arc**. Draw a fourth line from (-13, 13) to (-13, -9) Connect the top of the two innermost lines with an **arc**.

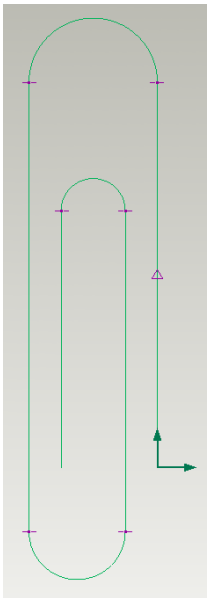

Look familiar? This is now the **path** for your paper clip.

Now, you will need a profile of the correct diameter for the wire that will make up the paper clip. The profile will be perpendicular to the path, so create a **New Sketch** named **'profile'** on the **Frontal workplane**. Sketch a **Circle** in the workplane view with the **Point of Origin** centered on the circle. The Point of Origin for both the path and the profile must be in the same location, or you will not be able to sweep along the path.

Constrain the circle Ø to 1.1 mm. Under the **Feature** pull-down menu, select **Sweep Profile** and **Along Sketch Path**.

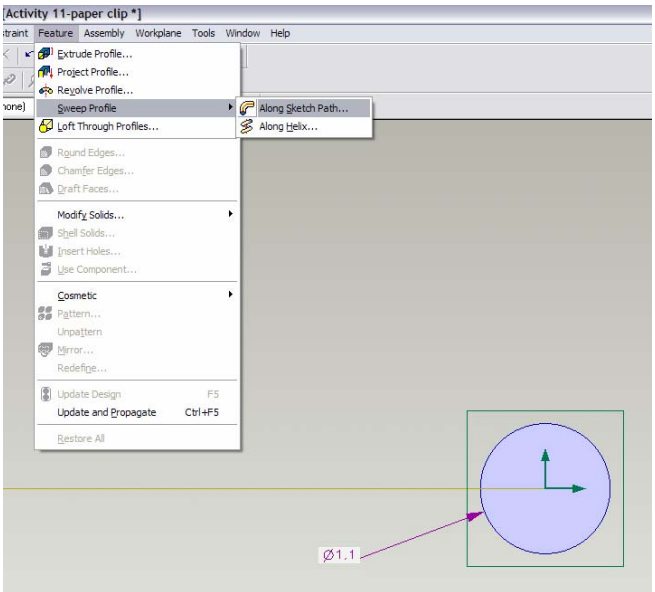

In the dialogue box that opens, make sure the sketches ***profile*** and ***path*** are in the right boxes and click OK. Switch to Trimetric view and Autoscale to see your paper clip!

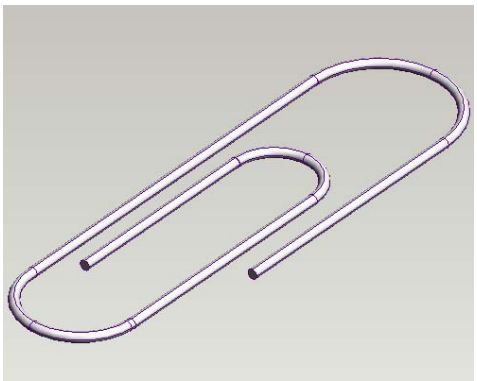

Save your drawing at this point according to the directions from your instructor.

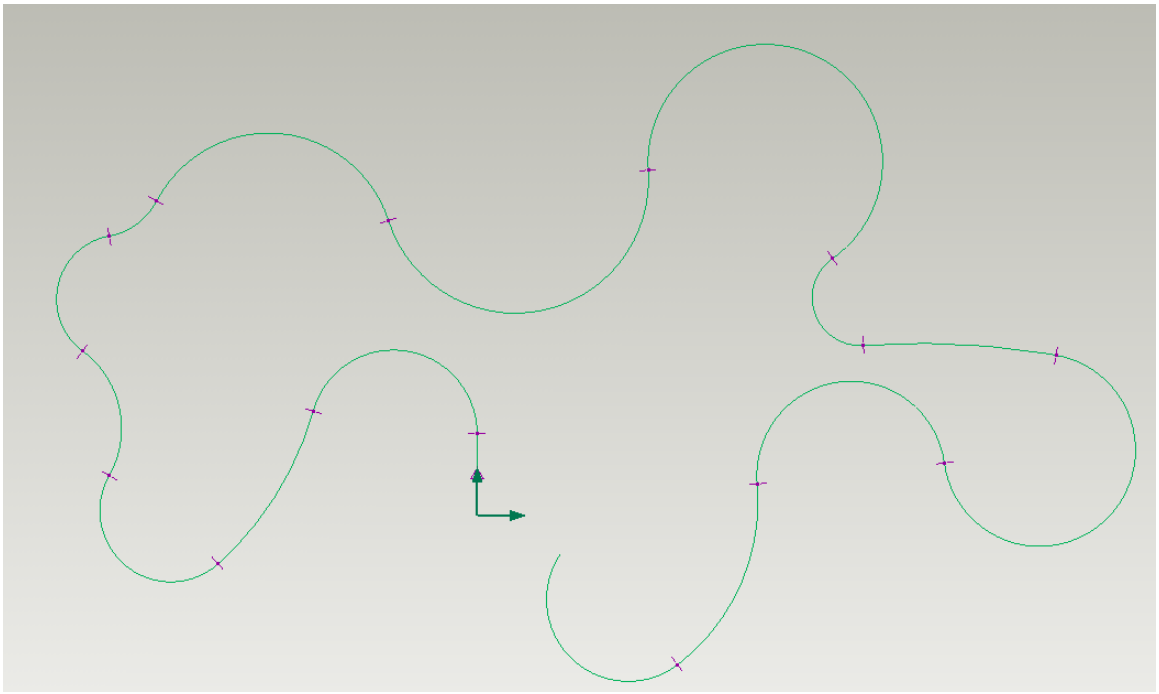

Create a new sketch named ***fun*** in the base workplane. Begin at the Point of Origin with a 1” long vertical line. The path MUST be perpendicular to the profile you will create, or an error will occur. Using the **arc** design tool, make a series of connected arcs of any number and shape, connected to the end of the straight line. **Toggle fix** the first line at the Point of Origin. Make sure all arcs are connected end-to-end.

In the **frontal** workplane, **switch to the workplane view** (**Shift+W**) and create a profile named ***pipe*** of two small, concentric circles (any size of 25 mm Ø or less) centered on the Point of Origin.

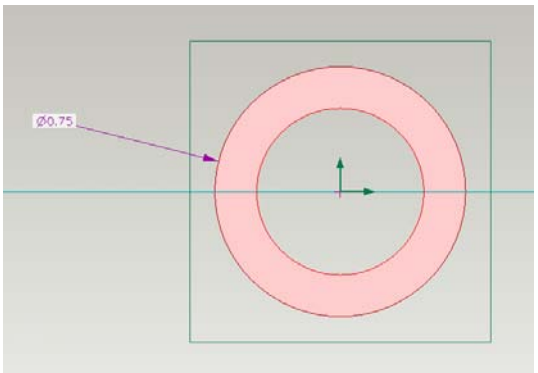

Sweep this profile along the path ***fun***. Change the view to see the final result.

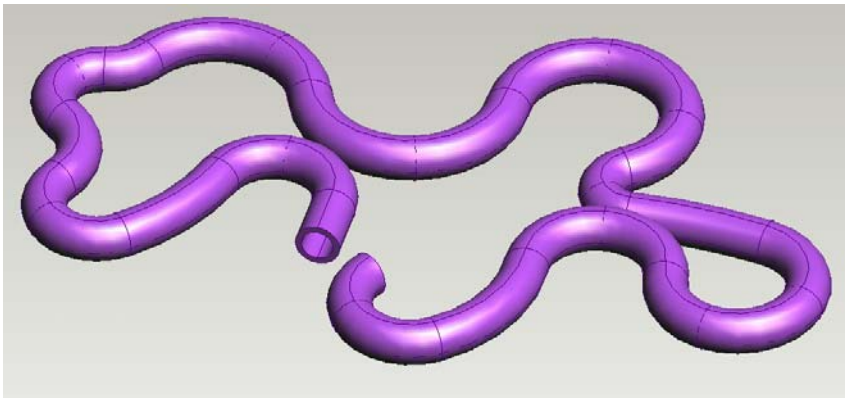

Save your drawing at this point according to the directions from your instructor.

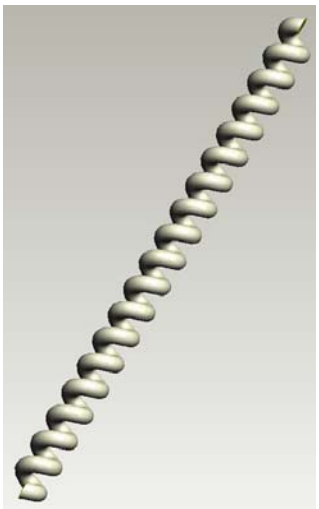

Sweep along a Helix

A **helix** is a spiral path and can be used to sweep a profile along a path just as we have done with the paper clip and the pipes. With a helical sweep, you can use an existing design or a construction line as the axis. The length of the **axis** determines the length of the helix. The shape of the profile determines the shape that is swept around the axis. Got that?

I just can't resist….

You will create a simple copper wire resistor, which is a wire wound around an insulator to slow the flow of electricity. To do this, create a new sketch. Rename the ***initial*** sketch in the Base workplane to 'axis'. In the Workplane view, start at the Point of Origin and draw a 105 mm line and toggle it to a Construction line. Change to the frontal view and create a new sketch called 'insulator'. Switch to the Workplane view and draw a 10 mm Ø circle centered on the Point of Origin.

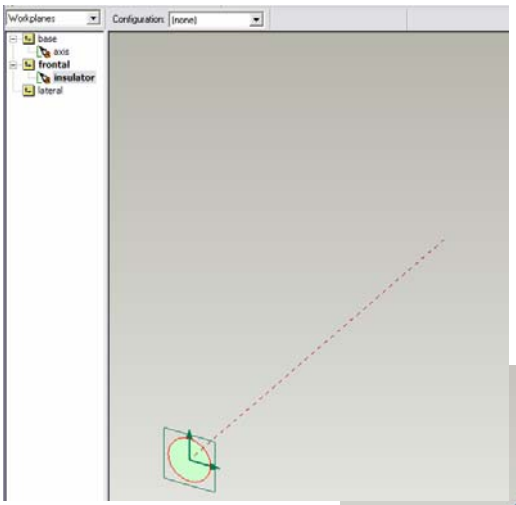

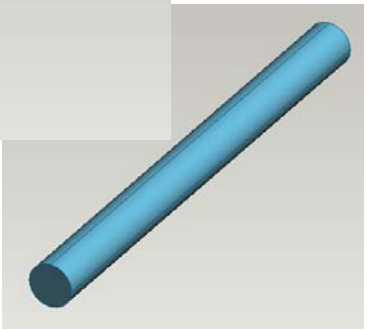

Extrude the circle by adding material to 115 mm **below** the workplane. **Save** the file as 'insulator' and according to the directions of your instructor.

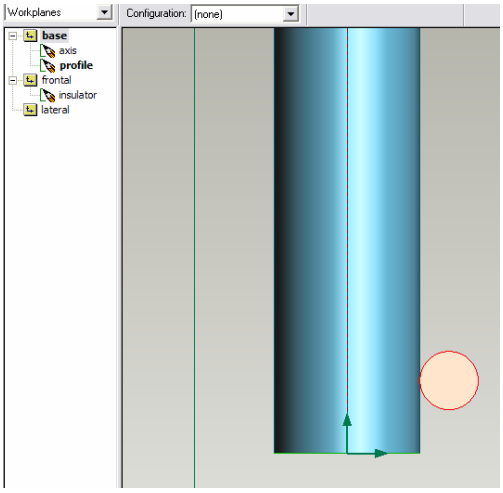

Return to the Base workplane. Create another sketch called ‘profile’ and select a copper-like color for this sketch. In the Workplane view, Zoom in on the lower portion of the insulator rod. Draw a 4 mm Ø circle that almost touches the lower right side of the insulator rod. Return to the ‘axis’ workplane and select the Trimetric view. Click on the axis construction line so that it is active. Go to the **Features** pull-down menu and select **Sweep Profile** and **Along Helix.** In the dialog box that appears, the ‘Sketch to use as the profile’ is ‘profile’. The pitch is ‘8’, taper angle is ‘0’, and you will ‘add material’. Click OK.

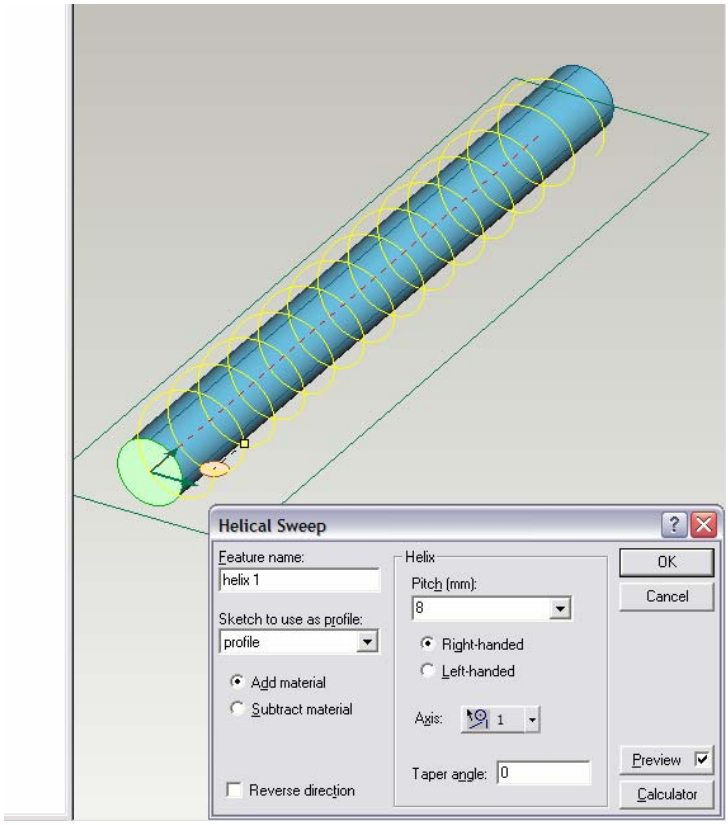

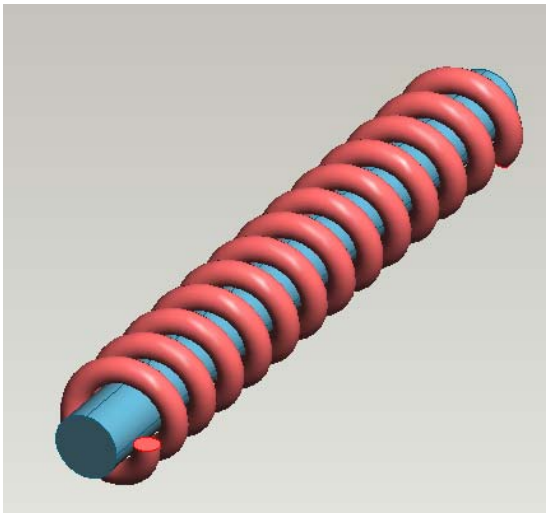

Adjust the view to better see your completed copper-wire resistor. **Save** your work according to the directions of your instructor.

Spring into action!

You will now use this same helical sweep to design a spring for an automobile suspension. First, rename the ‘initial’ sketch in the base workplane as ‘axis’. Draw a line 19” up from the Point of Origin. **Toggle**

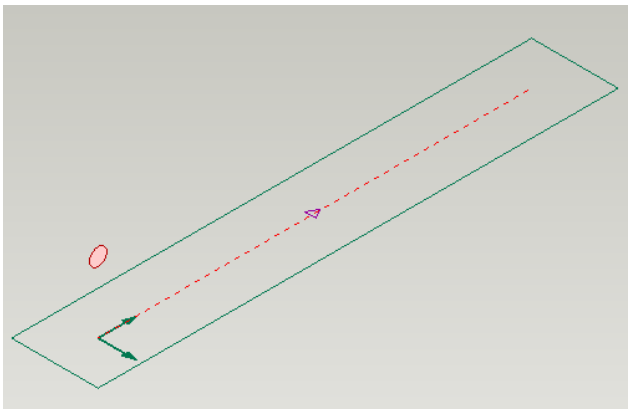

Fixed that line and turn it into a construction line. Now, create a new sketch called 'spring' in the lateral workplane. The sketch will be of a .75" Ø circle centered at the Snap to Grid coordinates of (0, 3.1) from the Point of Origin.

Return to the 'axis' sketch and click on the axis line to activate it. In the Feature pull-down menu, select **Sweep profile** and **Along helix**. In the dialog box that appears, make sure that the Sketch to use as profile is the **spring** sketch. Enter the pitch at 3 and leave the rest of the data as is. Click OK. Change your view to get a better look at the entire spring. Click **undo** when you get done viewing it so you are back to the construction line and profile of a small circle. **Do not save** at this point.

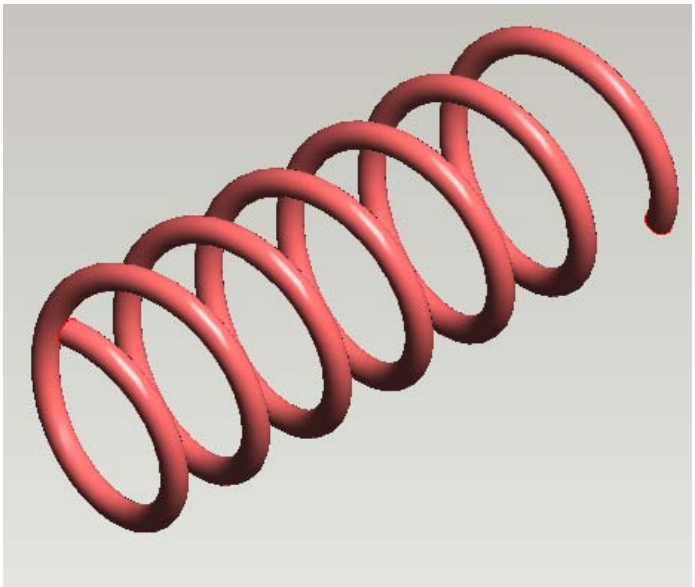

Now suppose that your engineering supervisor approaches you and asks you to redesign the spring to stiffen it because it is too weak to support the weight of the car. What would you do? You could either make the diameter of the **profile** sketch larger, or you could change the shape of the **profile** sketch to a larger mass. Let's have some fun with shapes. Let's try stiffening the spring by adding more mass in a shape other than a larger diameter circle.

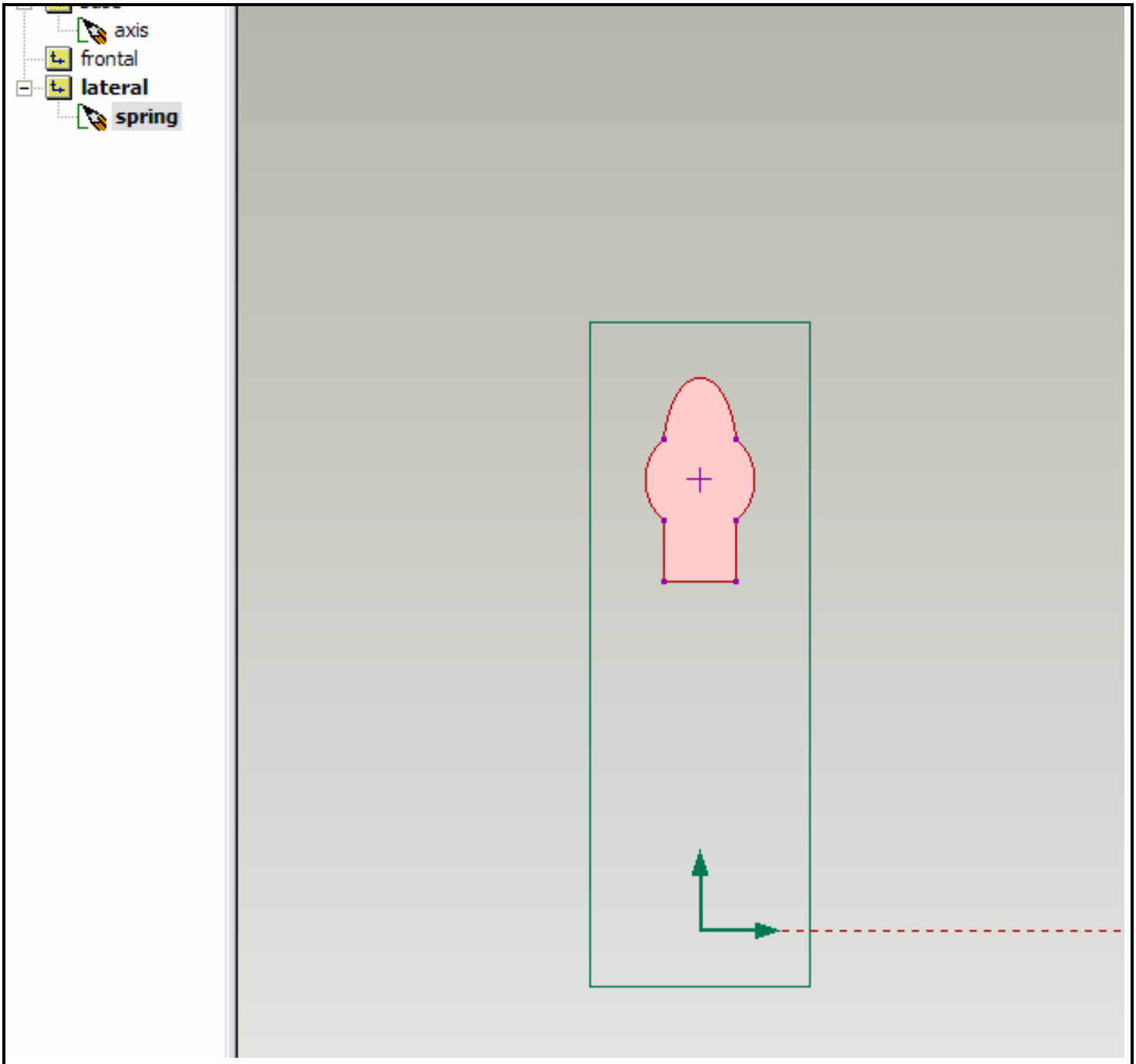

Go to the ‘spring’ sketch in the lateral workplane and change the shape of the circle to something a little different (see above). You can use additional shapes and the ‘delete lines’ icon to develop a shape that will give a little more mass than the .75” Ø circle.

Now, go back to the ‘axis’ sketch and sweep the ‘spring’ profile all over again at a pitch of 3, using the ‘spring’ sketch as the profile. Remember to **first click on the axis line to activate it.**

Try a few different shapes and….see how fun a design you can create!
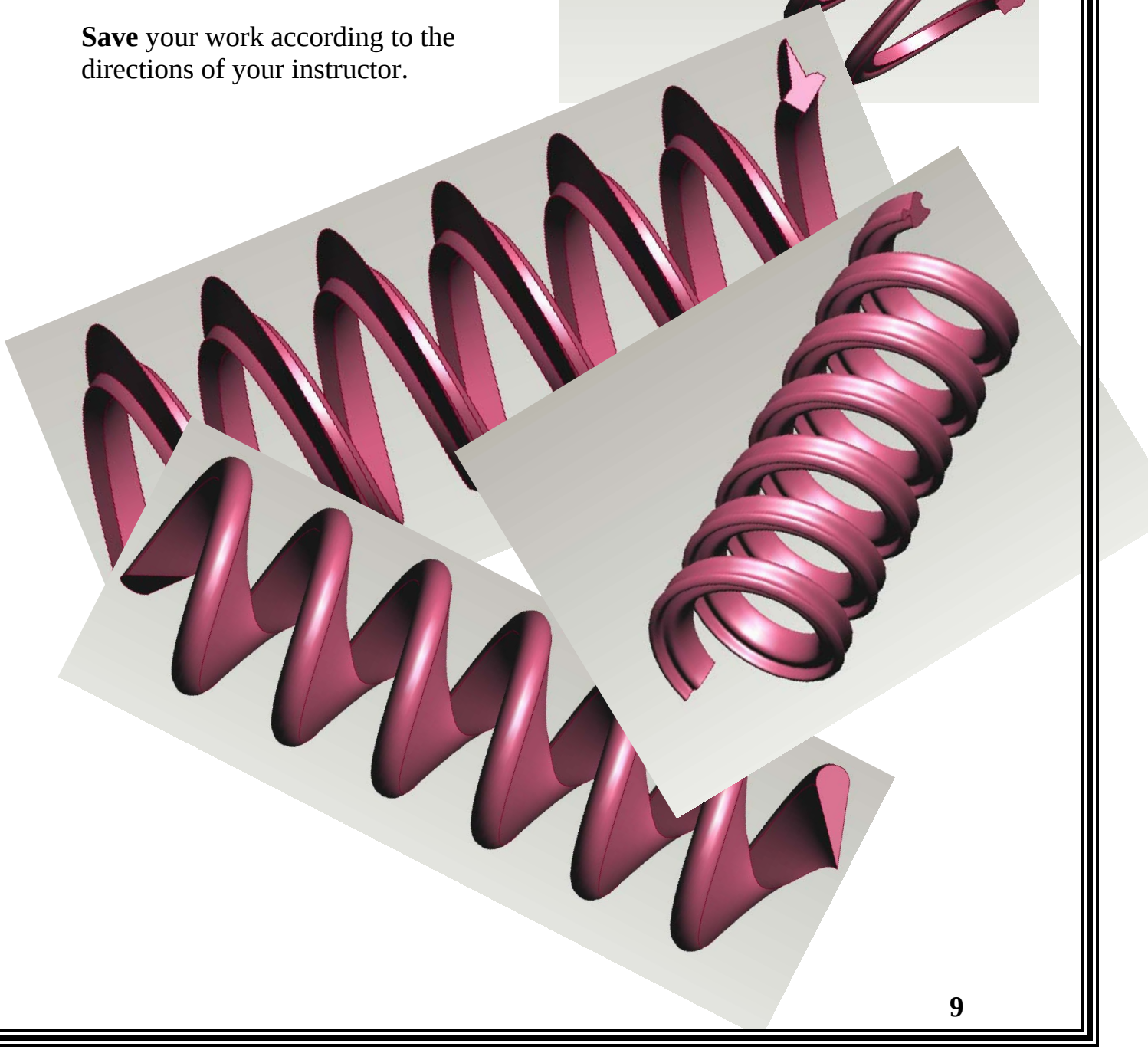
Save your work according to the directions of your instructor.